pathfinder

umbilical

PATHFINDER segment jaws are designed to allow cables to be ‘wiped in’, or removed easily at any time

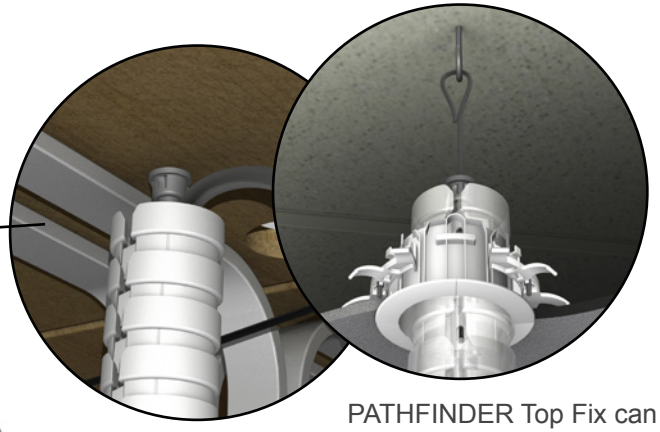

Optional stainless steel cord provides protection for cables from undue tension

PATHFINDER Top Fix can be: screwed to the underside of a desk top or meeting table; snapped into a 25mm hole in steel/plastic panels (such as PATHWAY ADAPTOR); or, (with integrated wire gripper), used to tension a ceiling hung umbilical

PATHFINDER can be extended on-site, to suit different applications, with a simple “PUSH & CLICK”

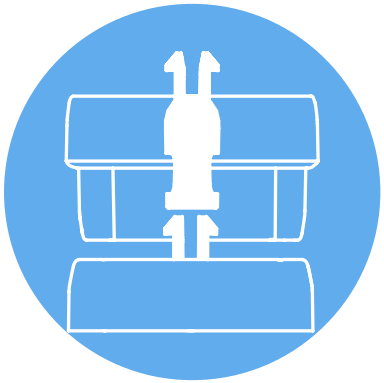

PATHFINDER has twin, asymmetric, segregated compartments, each capable of accepting power and data cables, as well as 16mm, 20mm and 25mm flexible conduits

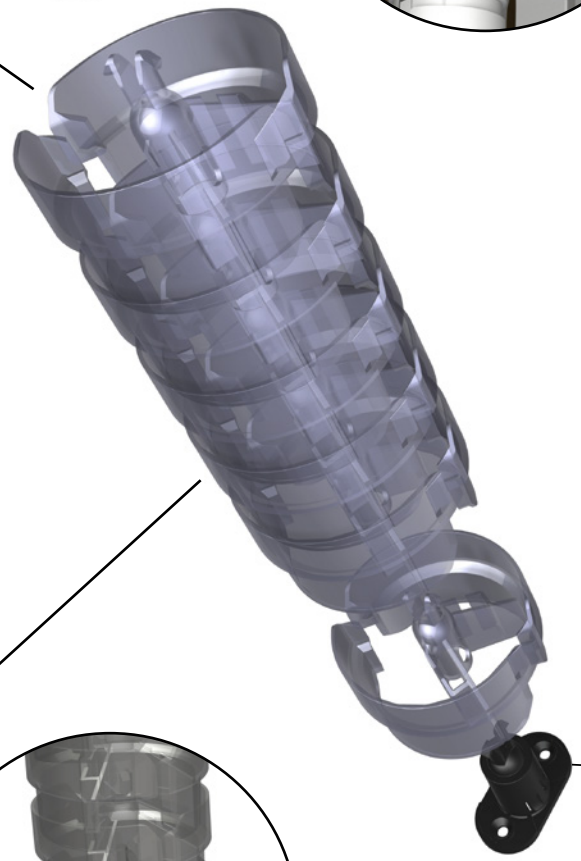

Enclosed segments provide improved aesthetics over ‘open segment’ umbilicals

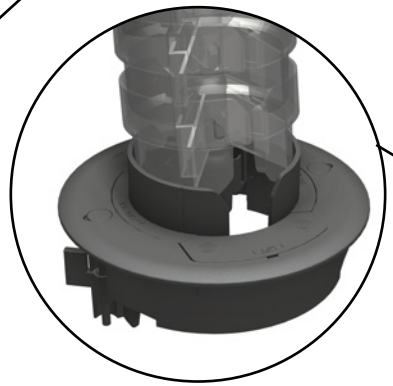

When used with our UNIQUE Floor Grommet, PATHFINDER allows **TOTAL CABLE PROTECTION**, unequalled by any other umbilical containment system

PATHFINDER bottom fixing can be: screwed to any suitable surface; used with the Pathfinder Weighted Base; or, clipped into the PATHFINDER Desk Flange for ceiling hung applications

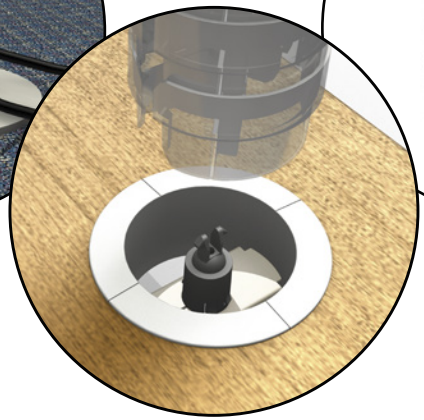

Where a self-supporting floor to ceiling RIGID umbilicolumn is required Pathfinder can be ordered with steel supporting rods and a steel top disc. The is an ideal option where no suitable ceiling beam is available to suspend the standard Pathfinder tension cable from and is an excellent alternative to conventional solid power poles.

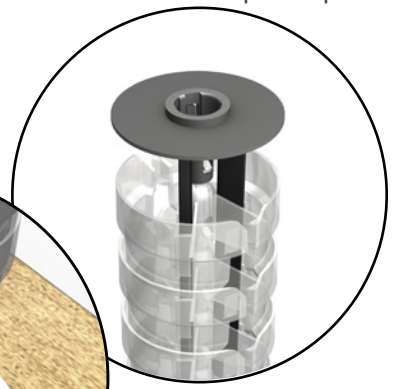

grommet

IEC 61534-22 compliant

PATHFINDER Floor Grommet is the first of its kind to enable **TOTAL CABLE PROTECTION** from desk to underfloor, when used in conjunction with Pathfinder Umbilical

Designed to QUICK-FIT into industry standard 5 inch / 125-128mm cutouts, the PATHFINDER Floor Grommet can be used as a conventional floor pass-thru, allowing power / data cabling, including 16mm flexible conduit, to exit via the Side Lids

But, if used in conjunction with PATHFINDER Umbilical, using PATHFINDER Grommet Adaptor, it can even accommodate multiple 20mm / 25mm data conduits as well

Industry standard size grommet allows it to be retrofit into existing raised floor apertures

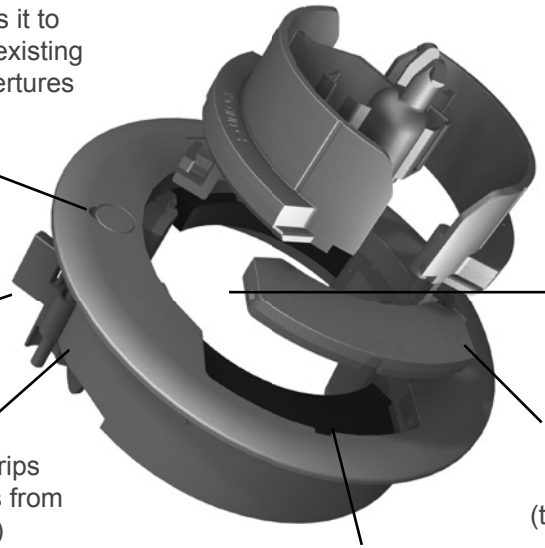

Screw Caps

Grommet Adaptor (bayonet connection)

OPTIONAL quarter turn spring loaded clamps for 10mm - 50mm floors

Large centre aperture allows, industry standard, track tap-off plugs and even POWERBOX PDUs, with RCBOs installed, to be passed through the floor

STANDARD Push Fix Grips can accommodate holes from 125mm - 128mm (5inch)

Tethered Side Lid (tool release)

Foam Air Block for pressurized floors

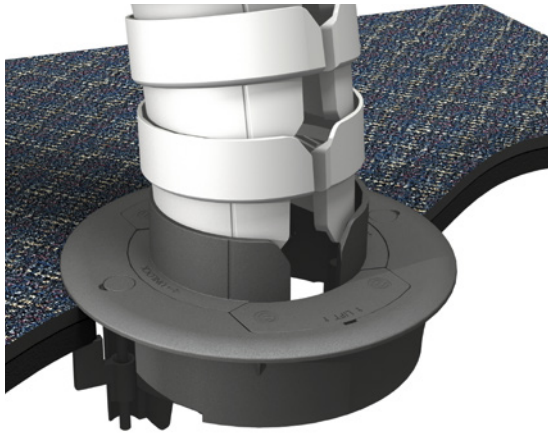

"The only way to totally protect cables, is to enclose them from end-to-end. The PATHFINDER System achieves that and in so doing completely removes cables from view - perfect!"

zipper

Inserting cables making you mad?
...we've made it as easy as 1, 2, 3

1

2

3

PATHFINDER - safety, practicality and aesthetics - combined!

When considering power and data cables - how much protection is enough?

JUST ENOUGH?

PATHFINDER with WEIGHTED BASE protects and manages cables vertically

H & S WARNING -
but it cannot protect cables across the floor

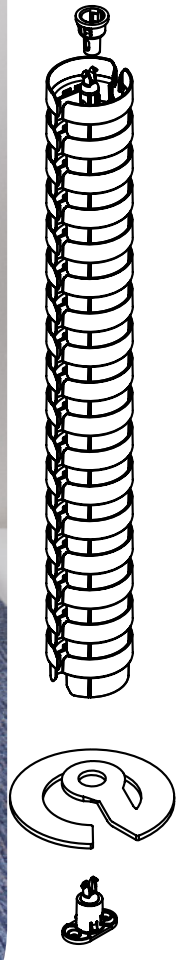

Make it easy
Use Zipper

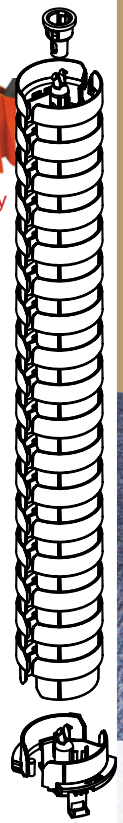

OR TOTAL?

TOTAL CABLE PROTECTION with PATHFINDER and PATHFINDER GROMMET

SAFE:
with no cables exposed, tripping hazards are avoided and obstacle-free cleaning prevents dust & dirt build up

floor to desk

PATHFINDER can do both, the choice is yours!

ceiling to desk

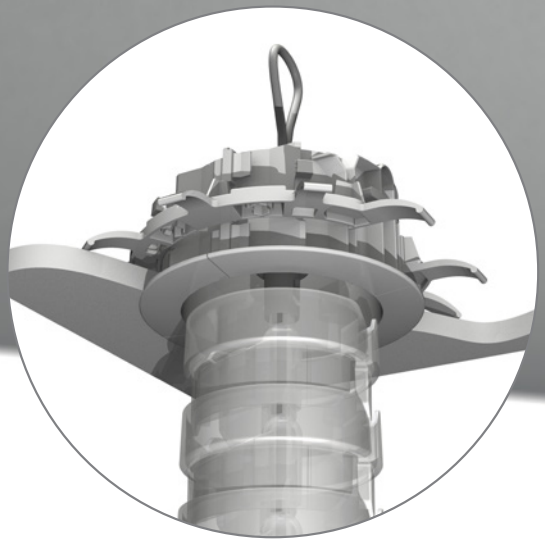

PATHFINDER Ceiling Collar gives a clean finished look when PATHFINDER drops through false ceilings. Designed to split in half, the Ceiling Collar can be clipped around PATHFINDER after it has been hung and cables ‘zipped in’

Ceiling to desk umbilicals allow greater freedom for desk positioning (below ceiling apertures), than solid power poles, where CAD floorplans and on-site installation inevitably differ

PATHFINDER provides an ideal solution where power and data services are distributed in the ceiling.

Using our custom designed Ceiling Collar and Desk Flange, PATHFINDER provides **TOTAL CABLE PROTECTION** from ceiling void to PATHWAY cable tray

PATHFINDER Desk Flange simply clips into a 102mm (4inch) aperture, securing the base and allowing cables safe passage into PATHWAY cable tray under the desk

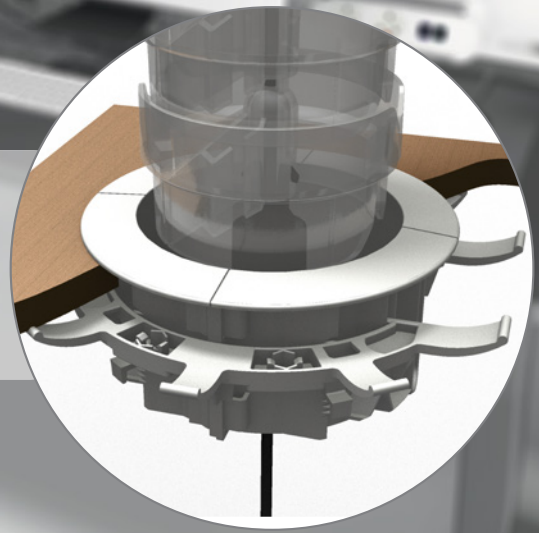

technical

TOP FIX

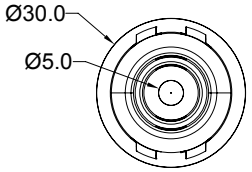

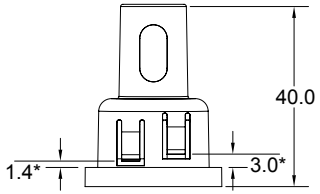

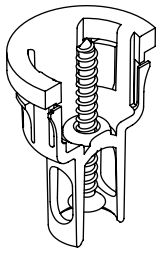

CUTOUT DIMENSIONS
(both top & bottom fix)

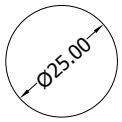

* OPTIONAL PANEL THICKNESSES

BOTTOM FIX

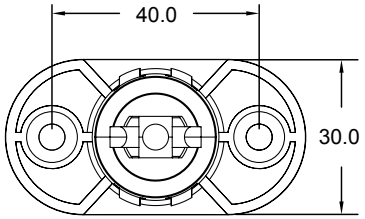

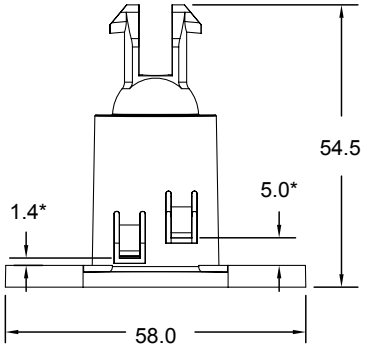

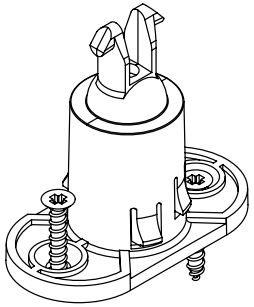

WEIGHTED BASE

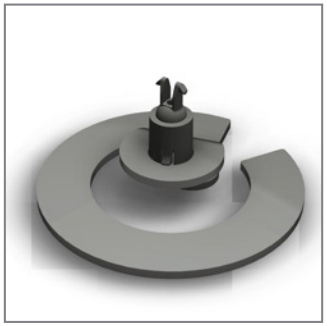

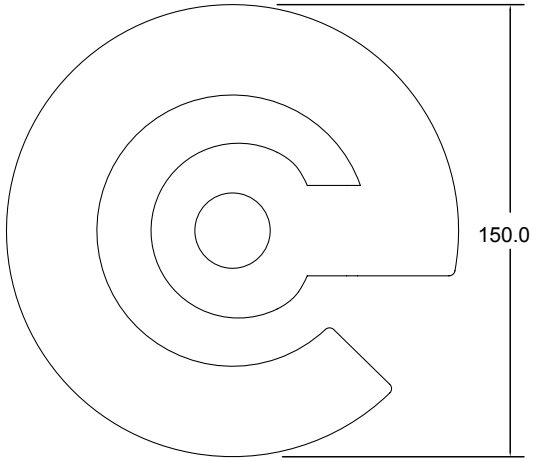

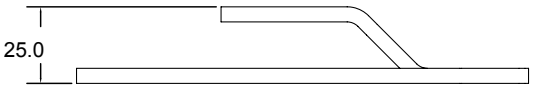

REMEMBER!
Make it easy
Use ZIPPER

PATHWAY ADAPTOR

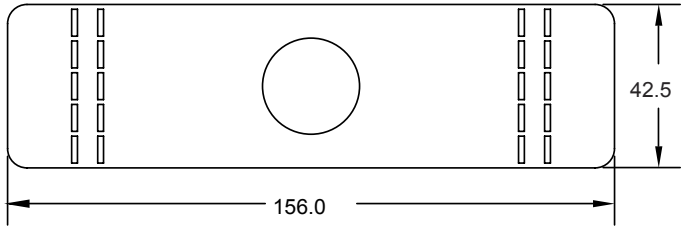

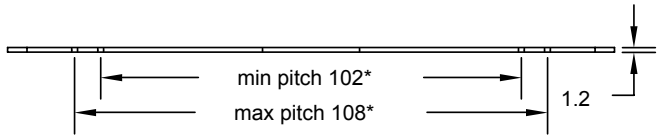

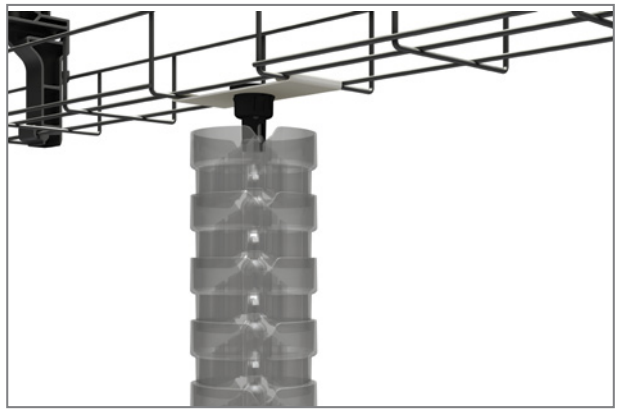

*PATHWAY ADAPTOR CAN ALSO BE USED ON COMPATIBLE TRAYS OTHER THAN PATHWAY
Check with OE Electrics outside these sizes for alternative/bespoke bracket

FLOOR GROMMET

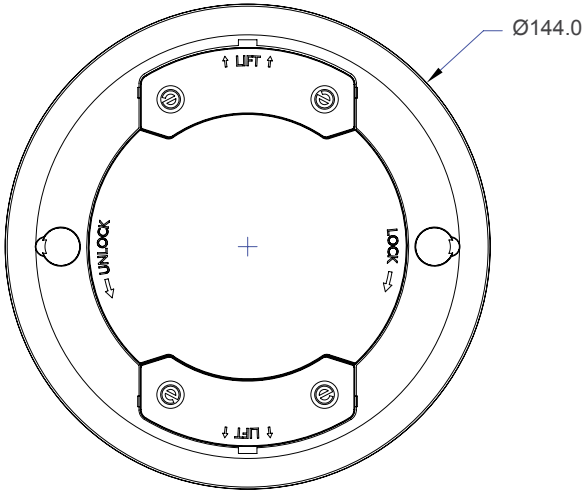

GROMMET CUTOUT 125 - 128mm (5 inch)
PUSH FIT thicknesses min 10mm
CLAMP FIT thicknesses min 10mm max 50mm

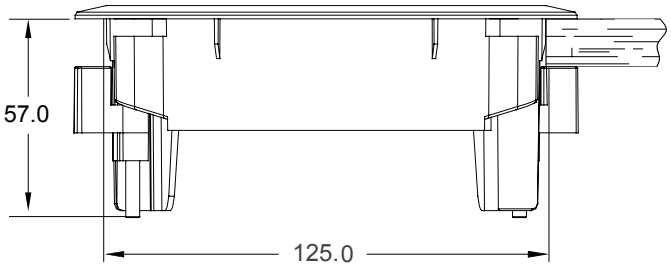

CEILING COLLAR

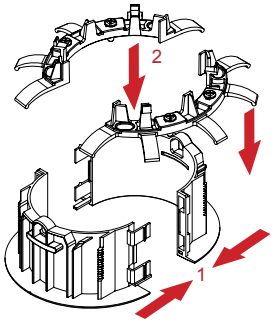

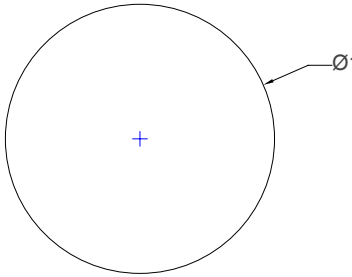

Cutout hole is Ø102mm (4inch) with cutout hole thickness 2-40mm

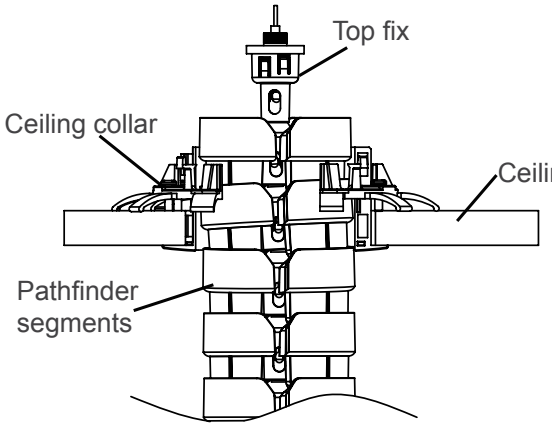

Note: DO NOT hang PATHFINDER from Ceiling Collar, it is only a pass-thru

DESK FLANGE

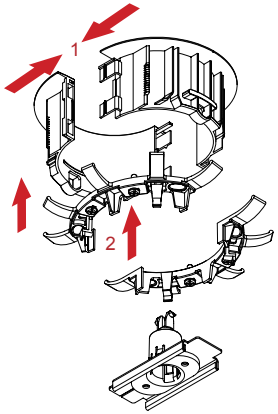

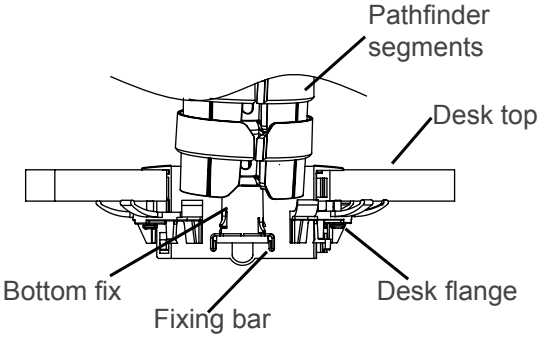

Note: DO NOT use Desk Flange upside down to hang from false ceiling tiles

SEGMENT

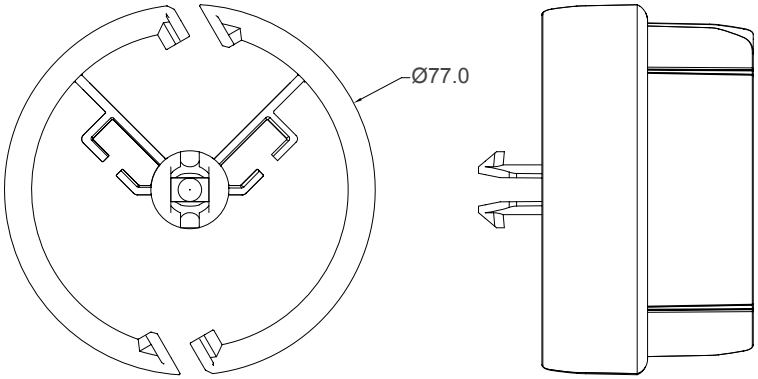

PATHFINDER CABLE AND CONDUIT CAPACITIES

Cable Size (OD = Outer Diameter)	Cable Type (examples)	Small compartment	Large compartment	Grommet sides (each side)
Cables 6mm OD	eg: CAT5e	19 1	58 1	12 1
Cables 9mm OD	eg: 3 core 1.5mm² / CAT6	8 1	26 1	6 1
Cables 11mm OD	eg: 3 core 2.5mm²	6 1	17 1	4 1
Conduit 16mm OD	eg: underfloor track tap-off	2 2	6 2	2 2
Conduit 20mm OD	eg: data conduit	1 23	3 23	0
Conduit 25mm OD	eg: data conduit	1 23	1 23	0

Note: All capacities reduce if using the Pathfinder Zipper

Notes:
1 - At 40% fill
2 - Maximum
3 - 20mm/25mm conduit cannot be inserted with the Zipper

common configs

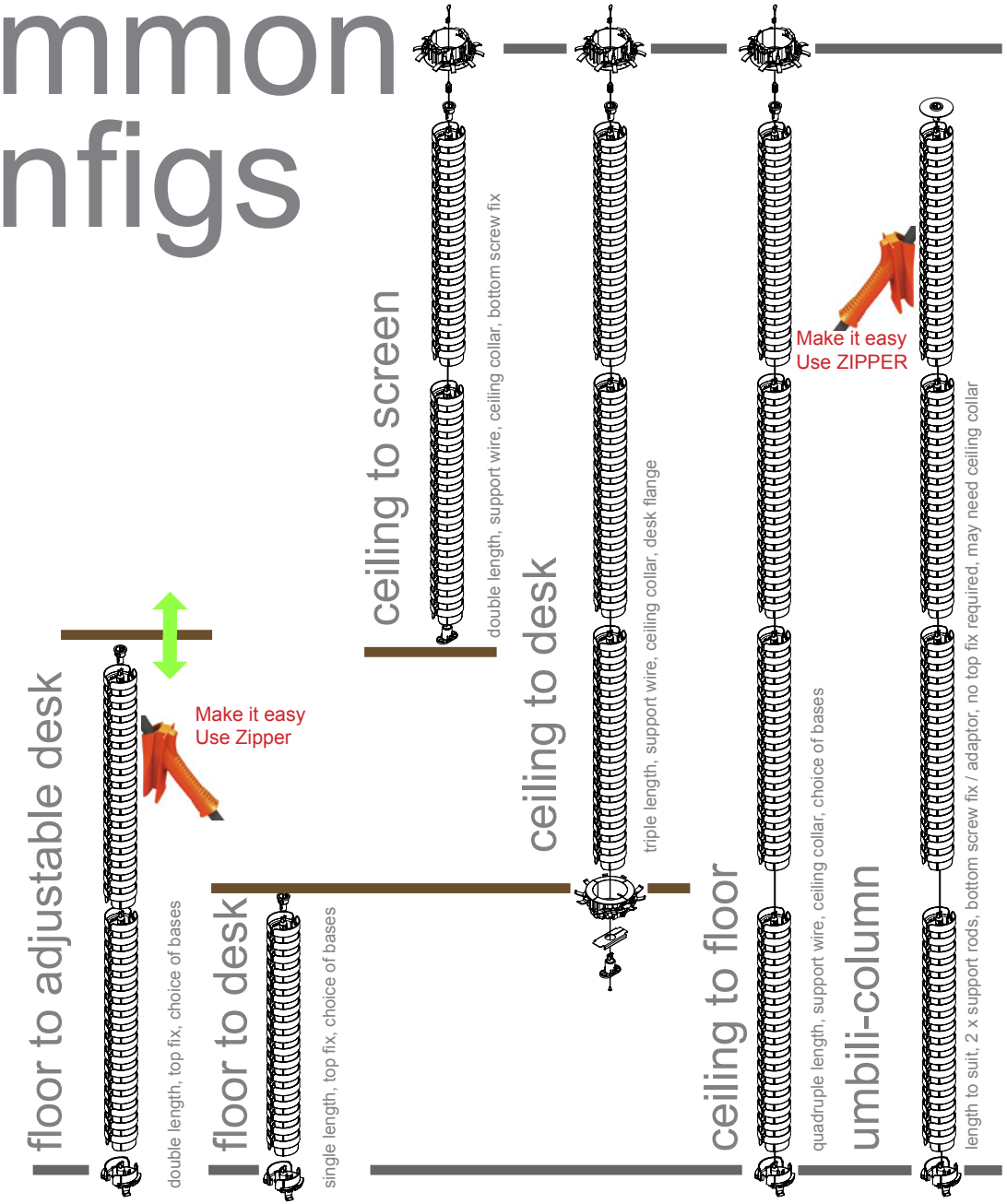

colours

CLEAR

WHITE

SILVER

WHITE

Graphite Grey

Light Grey

oeelectrics
always innovating