Antiference

TECHNOLOGY... SINCE 1937

www.antiference.co.uk

HDMI

HDMIE70V3

4K 70m Extender with Auto-scaling, HDMI loop & IR control

User Guide

1. Important Safety Notice

Thank you for purchasing this Antiference HDMI distribution product. Please read the following instructions carefully and retain for future reference.

1. Please pay careful attention to the following safety considerations:
2. Do not place any items on the device
3. Ensure no liquids are on or near the device as splashes may damage the unit
4. For cleaning, use a damp cloth only without solvents
5. Do not attempt to open the case as there is a danger of electric shock
6. Repairs should be carried out by a qualified technician
7. Place the unit in a well ventilated area to prevent overheating
8. Carry out the installation before connecting the device to a source of power
9. Use only the supplied power supply as 3rd party products may damage the product

2. Introduction

This HDMI extender sends 1080@60 or 4K/UHD@60Hz (2160p) resolution signals up to 70meters over a single CAT6 cable with HDCP 2.2 support.
This extender features an autoscaling function to enable use of a 1080p display and a 4K source.
It supports HDR, 24bits deep colour, bi-directional IR control & features an HDMI loop out for local display.
Audio can be extracted from the reciever via the S/PDIF port.

3. Features

1. Auto-scaling to allow use of 1080p display & 4K source
2. Supports full HD 1080p@60Hz, UHD@60 & 4K@25 with HDCP2.2
3. Extend HD/UHD signal over CAT6 up to 70 meters
4. Audio extractor via S/PDIF on receiver
5. HDMI loop out on transmitter
6. HDR supported with 4:4:4 colour space
7. Supports bi-directional IR control
8. Supports audio formats: Dolby True HD 7.1/Dolby Digital 5.1
9. Lightning, surge & ESD protection

4. Package contents

Transmitter unit x1pc

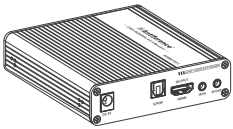

Receiver unit x1pc

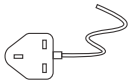

DC5V/2A x2pcs

User manual x1pc

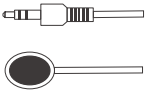

IR blaster extension cable x1pc

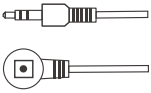

IR receiver extension cable x1pc

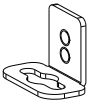

Mounting brackets x8pcs

Screw x18pcs

5. Installation Requirement

1. HDMI source device such as SKY Q or HD, Blu Ray player, Apple TV CCTV etc
2. HDMI display device with HDMI input port – HDTV, monitor or projector
3. UTP/STP CAT6/6A/7 cable, following the standard IEEE-568B.

6. Product Description

6.1 HDMI Transmitter (TX)

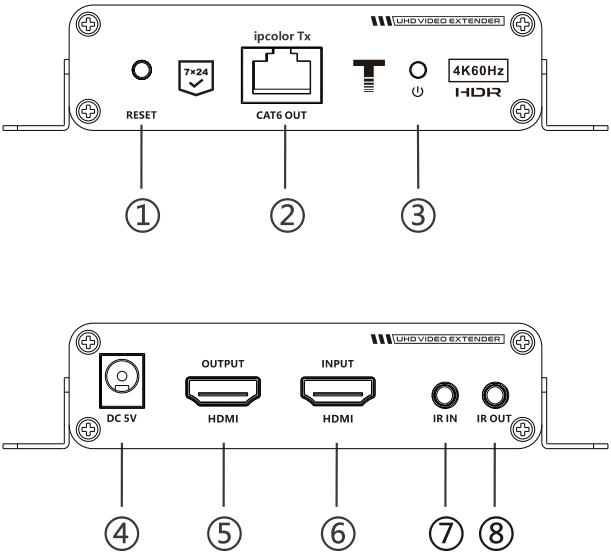

①	Reset button	Press to restart the device
②	Rj45 signal output	Connect with network cable
③	Power/Signal indicator	When there is power and no HDMI signal, the indicator will flash, when there is HDMI signal, the indicator will light solid blue
④	DC5V input	Connect with DC5V/2A power adapter
⑤	HDMI output	Connect with HDMI display device
⑥	HDMI input	Connect with the source device
⑦	IR in	Connect with IR receiver extension cable, please make sure the remote control used is within the effective range
⑧	IR out	Connect with IR blaster extension cable, please get closer to the source device while using

6.2 HDMI Receiver (RX)

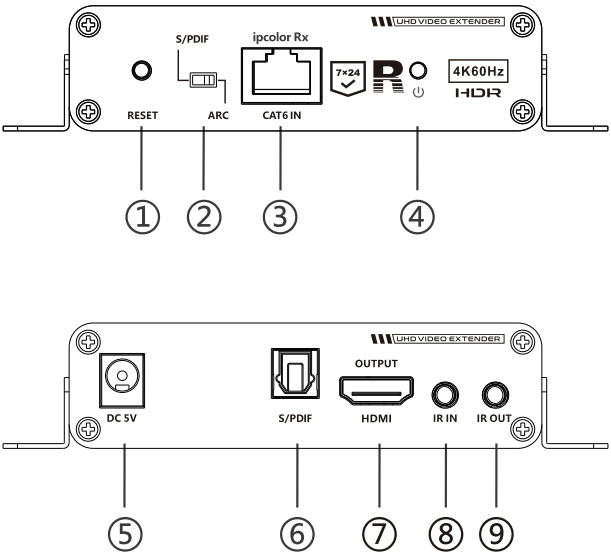

①	Reset button	Press to restart the device
②	Audio switch	Choose to decode audio from HDMI or ARC output from fiber optic interface
③	Rj45 signal input	Connect with network cable
④	Power/Signal indicator	When there is power and no HDMI signal, the indicator will flash, when there is HDMI signal, the indicator will light solid blue
⑤	DC5V input	Connect with DC5V/2A power adapter
⑥	S/PDIF out	Output digital audio signal.
⑦	HDMI output	Connect with HDMI display device
⑧	IR in	Connect with IR receiver extension cable, please make sure the remote control used is within the effective range
⑨	IR out	Connect with IR blaster extension cable, please get closer to the source device while using

7. Installation Procedure

7.1 Connection Diagram

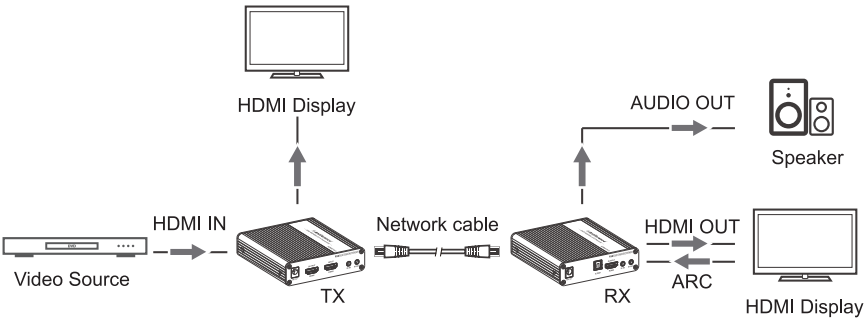

7.2 To make a Cat5e/6 network cable, follow standard IEEE-568B

1. White and orange
2. Orange
3. White and green
4. Blue
5. White and blue
6. Green
7. White and brown
8. Brown

7.3 Connection Instruction

1. Connect the source device to the HDMI port on the TX and connect the display to the HDMI port on the RX.
2. Connect the TX and RX together with a CAT6/CAT6A/CAT7 network cable.
3. A local display may be connected to the HDMI loop on the TX if required.
4. Connect the power supply to the TX & RX

Note: recommended cable length range 2 ~ 70m

7.4 Bi-directional IR Control

1. This extender supports bi-directional IR control. This means the source device may be controlled from the remote location and the EDU (TV or display) may be controlled from the source end.
2. If control is required at the receiver (TV) end, please connect IR transmitter sensor cable to the IR OUT port on the transmitter box. Then connect the IR receiver sensor cable to the IR IN port on the receiver box. This configuration is reversed for control at the source end.

7.5 Auto-scaling function

1. The autoscaling function allows a 1080p display to be connected to the receiver end when a 4K source is connected to the transmitter. The receiver auto-scales the resolution to 1080p. It does not support 720p
2. The HDMI loop out does not support auto-scaling. If the source connected to the transmitter is 4K, then the display connected to the HDMI loop out must also be 4K for video to be displayed.

8. FAQ

Q No audio/video being received?
A 1. Check the resolution of the source. If 4K is being used, check compatibility of the displays
2. Ensure all connections are pushed in correctly.
3. Press the reset button to restart TX or RX

Q Black screen displayed
A 1. Make sure the EDU (TV or display) is switched to the correct HDMI input.
2. Check the cable is within the specified cable length range.

Q Display shows unusual colour or no sound is being received
A 1. Reset the TX or RX with the reset button
2. Try new HDMI cables

Specification

Items	Specification
HDMI Signal	Compatible with HDMI 2.0, HDCP2.2. Supports CEC
Resolutions Supported	480i@60Hz, 480p@60Hz, 576i@50Hz, 576p@50Hz, 720p@50/60Hz, 1080i@50/60Hz, 1080p@50/60Hz, 3840x2160p@24/25/30/60Hz 4096x2160p@24/25Hz, 1280x960, 1280x800, 1280x768 1680x1050, 1360x768, 1366x768, 1600x900, 1024x768 800x600 (reciever auto-scale from 4K - 1080p)
Audio Formats	LPCM, DTS-HD, Dolby True HD, TrueHD 7.1CH/Dolby Digital 5.1
Network Cable	CAT6, CAT6A, CAT7
Transmission Length	Up to 70m
Input/output HDMI Cable Length	Up to 8m max (24AWG)
Input & output TMDS signal	0.7~1.2Vp-p (TMDS)
Input & output DDC signal	5Vp-p (TTL)
Electrostatic Protection Level	1a Contact discharge level 3 1b Air discharge level 3, Implementation of the standard: IEC61000-4-2
Working/storage temperature	-20~60°C/-30~70°C
Power Supply	DC5V/2A x 2 pcs
Power Consumption	<4W TX, <4W RX
Product Dimension	106(L) x 99(W) x 26.2(H)mm x 2pcs
Enclosure Material	Metal/grit blast
Weight	TX:210g RX:210g
Colour	Black

Declaration of Conformity

We, ANTIFERENCE LIMITED herewith declare that the HDMI extender kit complies with all essential requirements and any other applicable conditions set forth on directive 2014/30/EU.

According to the WEEE (Waste Electrical and Electronic Equipment) EU Directive, do not dispose of this product as household waste or commercial waste. Waste Electrical and Electronic Equipment should be appropriately collected and recycled as required by practices established for your country. For information on recycling of this product, please contact your local authorities, your household waste disposal service or the shop where you purchased the product.

A full declaration document can be found on our website www.antiference.co.uk